Features

- Four wire system
- Piezoresistive measuring element
- Pressure measurement relative or absolute
- Output signal 4-20 mA and RS-485
- Analogue output adjustable within 1 : 4 of the original measuring range
- RS-485 interface with Modbus RTU protocol
- Conformity error ≤ ±0.1 % FS, option ≤ ±0.05 % FS
- Standard DIN measuring ranges from 0 … 100 mbar up to 0 … 160 bar or selection of measuring ranges in mWC or psi
- Temperature compensation within -10°C ... +50°C [+14°F … +122°F] or -25°C ... +85°C [-13°F … +185°F]
- Temperature output
- Optional overvoltage (lightning) protection according to EN 61000-4-5
- Compact and robust

Picture

Specifications

Unless otherwise stated, all specifications are at supply voltage 24 V DC, R_L = 100 Ω and 25°C [77°F] operating temperature..

Measurement Range Independent Technical Data

Type	4-wire current transmitter
Analog output signal	4 … 20 mA
Resolution	12 bit (< 0,025 % FS)
Digital output signal (pressure and temperature)	RS-485 Modbus RTU, 9600 bps
Protocol details	see Data Sheet SW 21.220.1560205.001
Analog output signal, temperature	4 … 20 mA
Measuring range	see temperature compensation range
Resolution	0.1°C [0.18°F]
Accuracy of temperature measurement	≤ ±1°C [±1.8°F] in entire temperature measuring range
Interface for adjustment	RS-485 Modbus RTU, 9600 bps
Protocol details	see Data Sheet SW 21.220.1560205.001
Output 0% adjustability	-5% of orig. FS ... +105% of orig. FS (rel. measurement) 0% of orig. FS ... +105% of orig. FS (abs. measurement)
Output 100% adjustability	-5% of original FS ... +105% of original FS
Difference (0% - 100%) adjustability	≥ 25% of original FS and ≥ 50 mbar [0.725 psi]
Damping adjustability	~ 33 ms (default), 100 ms, 1 s, 10 s = 30 Hz (default), 10 Hz, 1 Hz, 0.1 Hz cut-off frequency

Supply voltage	DC 9 ... 30 V
Reverse polarity protection	Integrated, standard
Overvoltage protection (lightning protection)	Option
Supply voltage influence	< 0.1 % FS
Current consumption (requirement without 4 ... 20 mA outputs, without RS-485 load)	≤ 20 mA
Maximum voltage housing / supply	500 V
Permitted load	see paragraph "Cable Lengths"
Load influence	< 0.1 % FS
Protection class	IP65 (~NEMA 6)
Medium temperature range	0°C ... +80°C [+32°F ... +176°F] standard -25°C ... +100°C [-13°F ... +212°F] option
Temperature compensation range	-10°C ... +50°C [+14°F ... +122°F] standard -25°C ... +85°C [-13°F ... +185°F] option
Storage temperature range	see medium temperature range
Acid resistance	pH5 ... pH9
Weight	Approx. 190 g [0.419 lb] without overvoltage protection Approx. 270 g [0.595 lb] with overvoltage protection
Measuring cell, membrane, housing	Stainless steel 1.4435 (316L)
Seals	Viton
Pressure Connection	Choice of G 1/2 M or 1/2 NPT M
Electrical Connection	Binder 723, 7-pin (IP67) [NEMA 6P]
Electromagnetic Compatibility	
Emissions	
Basic specification emissions	EN 61000-6-3
Emissions class B	EN 55022
Immunity	
Basic specification noise immunity	EN 61000-6-2
Electrostatic discharge	EN 61000-4-2 (4 kV contact, 8 kV air)
Radiated electromagnetic field	EN 61000-4-3 (10 V/m, 80 ... 1000 MHz, 80% AM 1 kHz)
Radiated electromagnetic field (GSM)	EN 61000-4-3 (10 V/m, 950 MHz, 200 Hz on/off)
Fast transients (burst)	EN 61000-4-4 (2 kV)
Conducted electromagnetic interference	EN 61000-4-6 (10 V/m, 0,15 ... 80 MHz, 80% AM 1 kHz)
Impulse voltage (surge)	EN 61000-4-5:1995 (10 kA 8/20µs) [only with the option overvoltage (lightning) protection]

Quality Tests

CE The transmitters fulfil the requirements for noise immunity and emissions of the EMC directive 89/336/EEC.

Measurement Range Dependent Technical Data

Pressure ranges		**< 0.2 bar** [2.9 psi]	**≥ 0.2 ... 1 bar** [2.9...14.5 psi]	**≥ 1 ... 160 bar** [14.5...362.6 psi]
Overload		3 bar [43.5 psi]	3 bar [43.5 psi]	3 x FS
Bursting pressure		≥ 200 bar [2900 psi]	≥ 200 bar [2900 psi]	≥ 200 bar (≤ 25 bar FS) [2900 psi (≤ 363 psi FS)] ≥ 850 bar (> 25 bar FS) [12328 psi (> 363 psi FS)]
Conformity error incl. hysteresis and repeatability				
-10°C ... +50°C [+14°F...+122°F]		≤ ±0.2 % FS	≤ ±0.1 % FS	≤ ±0.1 % FS
-25°C ... +85°C [-13°F...+185°F]		≤ ±0.2 % FS	≤ ±0.1 % FS	≤ ±0.1 % FS
Option for pressure ranges ≥ 1 bar		---	---	≤ ±0.05 % FS
Temperature error zero / span				
-10°C ... +50°C	typ.	≤ ±100 ppm FS/°C	≤ ±60 ppm FS/°C	≤ ±60 ppm FS/°C
[+14°F...+122°F]	max.	≤ ±150 ppm FS/°C	≤ ±100 ppm FS/°C	≤ ±100 ppm FS/°C
-25°C ... +85°C	typ.	≤ ±200 ppm FS/°C	≤ ±150 ppm FS/°C	≤ ±150 ppm FS/°C
[-13°F...+185°F]	max.	≤ ±250 ppm FS/°C	≤ ±200 ppm FS/°C	≤ ±200 ppm FS/°C
Long term drift	typ.	≤ 0.2 % FS/a	≤ 0.2 % FS/a	≤ 0.1 % FS/a

Dimensions [mm]

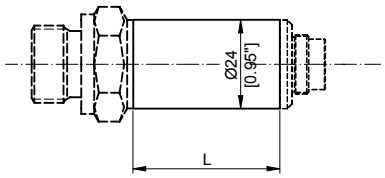

L = 94 mm [3.7"] without overvoltage protection
L = 185 mm [7.3"] with overvoltage protection

Pressure connectors:

Standard

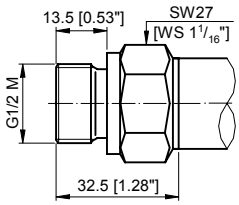

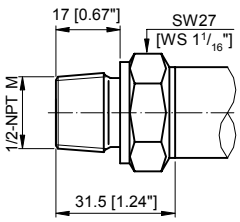

Electrical connector:

Binder 723, 7-pin Connector

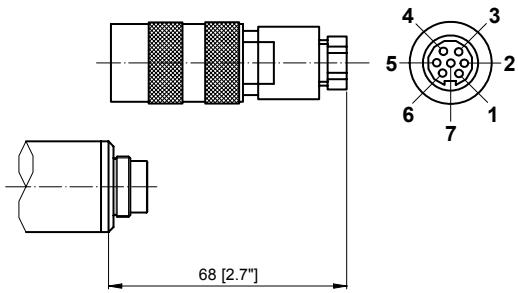

Pin	Usage
1	P_{out}
2	T_{out}
3	$+V_{in}$
4	GND
5	
6	A (RS485)
7	B (RS485)

Ordering Information

Table 1: The precise designation for an article is derived from the combination of the individual option codes according to the table (with the BAAN configurator PCF or manually).

MPJ	PCF Order Number														
	1/2	3	4	5	6	7	8	9	10	11	12	13	14	15	16
Type															
MPJ	PJ														
Pressure Type															
Gauge		1													
Absolut (vacuum)		2													
Sealed gauge		3													
Measuring Range															
0 ... 100 mbar = 0 ... 1.45 psi			0	0											
0 ... 160 mbar = 0 ... 2.32 psi			0	1											
0 ... 250 mbar = 0 ... 3.63 psi			0	2											
0 ... 400 mbar = 0 ... 5.8 psi			0	3											
0 ... 600 mbar = 0 ... 8.7 psi			0	4											
0 ... 1.0 bar = 0 ... 14.5 psi			0	5											
0 ... 1.6 bar = 0 ... 23.2 psi			0	6											
0 ... 2.5 bar = 0 ... 36.25 psi			0	7											
0 ... 4.0 bar = 0 ... 58 psi			0	8											
0 ... 6.0 bar = 0 ... 87 psi			0	9											
0 ... 10 bar = 0 ... 145 psi			1	0											
0 ... 16 bar = 0 ... 232 psi			1	1											
0 ... 25 bar = 0 ... 362.5 psi			1	2											
0 ... 40 bar = 0 ... 580.2 psi		3	1	3											
0 ... 60 bar = 0 ... 870.2 psi		3	1	4											
0 ... 100 bar = 0 ... 1450.4 psi		3	1	5											
0 ... 160 bar = 0 ... 2320.6 psi		3	1	6											
0 ... 1 mWC			6	0											
0 ... 2 mWC			6	1											
0 ... 5 mWC			6	2											
0 ... 10 mWC			6	3											
0 ... 20 mWC			6	4											
0 ... 50 mWC			6	5											
0 ... 1,5 psi			7	0											
0 ... 3,0 psi			7	1											
0 ... 7,5 psi			7	2											
0 ... 15 psi			7	3											
0 ... 30 psi			7	4											
0 ... 75 psi			7	5											
0 ... 150 psi			7	6											
0 ... 300 psi			7	7											
Special calibration (always > 0 ... 100 mbar)			9	9											
Pressure Connection															
G1/2 M (external thread)					1	3									
1/2 NPT M (external thread)					1	9									
Electrical Connection															
Connector Binder 723, IP67, 7-pin *							0	4							
Output Signal															
4 ... 20 mA P & T & RS485 without overvoltage protection									6	5					
4 ... 20 mA P & T & RS485 with overvoltage protection									6	6					
Accuracy															
±0.2 % FS, only for measuring ranges < 200 mbar											4				
±0.1 % FS, only for measuring ranges ≥ 200 mbar											2				
±0.05 % FS, only for measuring ranges ≥ 1 bar											6				
Temperature Range															
Compensated -10°C ... +50°C (Medium 0 ... 80°C)												0			
Compensated -25°C ... +85°C (Medium -25°C ... +100°C)												1			
(Cable Length)															
Always = 000													0	0	0

* The pressure transmitter always requires a plug-in cable coupling that has to be ordered separately.

Parameterisation

With the aid of the programming kit MPPKIT available as an accessory, the software of the submersible transmitter can be parameterised with a PC (see also Data Sheet 21.210.0066900.001 and Operating Instructions 21.810.0066900.001).

- Range selection for output current 4 ... 20 mA

  With the range selection 4 ... 20 mA, the 4 mA and 20 mA current values can be assigned to measured values other than the standard 0% and 100% of the nominal measuring range. (Typically with 4 mA a value from the range -5% ... +25% of the nominal measuring range, with 20 mA, a value from the range +25% ... +105% of the nominal measuring range.) In this way, a sub-range or even a negative pressure can be measured. The difference Δ between the minimum and maximum must amount to at least 25% of the nominal measuring range and be at least 50 mbar.

  Inverted control can be achieved by exchanging the values for 4 mA and 20 mA.

  The ranges of adjustability are presented graphically in the following illustrations.

Non-inverted Control:

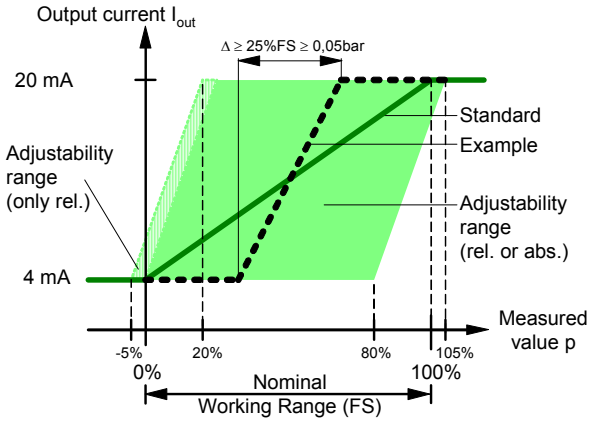

Inverted Control:

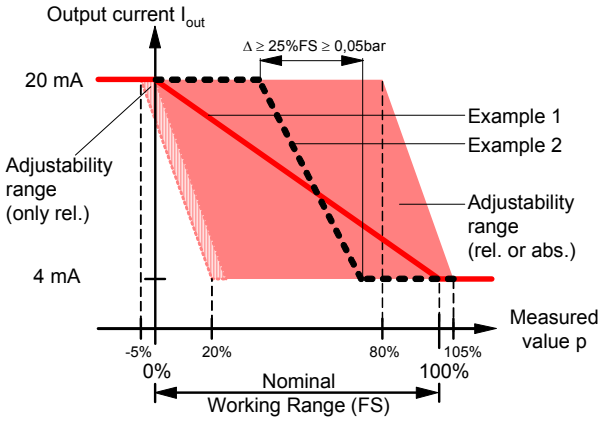

- Programmable Damping of the Current Output
  The analog output can be damped with a low pass filter of the 1st order. The adjustability enables values between ~ 33 ms (default) and 10 s.

  Note: During commissioning, damping is preferably left at the minimum value.
- Recalibrating the transmitter (calibration 0 % or 100 %) enables compensation of the drift which inevitably occurs with resistive pressure transducers. The zero drift alone or the combination of zero drift and slope change can be compensated. In doing so, the original calibration of the transmitter is not lost and can be recalled as necessary.

  Setting range 0%: -5% … +5% of nominal measuring range (FS) with relative measuring probes
  0% … +5% of nominal measuring range (FS) with absolute measuring probes
  Setting range 100%: 95% ... 105% of nominal measuring range (FS)

Standard Settings

The transmitters have the following standard parameterisation:

- Current range: 4 mA ... 20 mA
- Measurement start: 4 mA = 0% of nominal measuring range (FS)
- Measurement end: 20 mA = 100% of nominal measuring range (FS)
- Damping: ~ 33 ms

Block Diagram / Electrical Connections

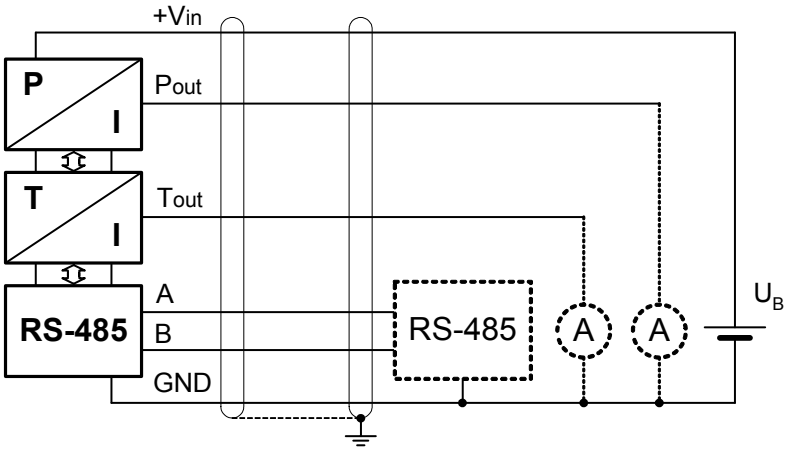

Connector Binder 723:

$+V_{in}$	=	Pin 3
Pout	=	Pin 1
Tout	=	Pin 2
A	=	Pin 6
B	=	Pin 7
GND	=	Pin 4

Cable Length

Several marginal conditions also contribute to determining the maximum cable length. Unlike 2-conductor transmitters, the maximum permitted resistance in the probe circuit can not be determined from one single formula. Depending on the application and mounting as well as on the use of only digital or only analog or both output types, some of the criteria listed below have to be taken into consideration:

Minimum Supply Voltage

If the conductor resistance is concentrated and designated as R_W, the following simplified replacement diagram results for the static consideration of a probe (I_S is the supply current without load, R_R is the RS-485 terminal resistance, Uo is the amplitude of the signal voltage at the output of the RS-485 driver):

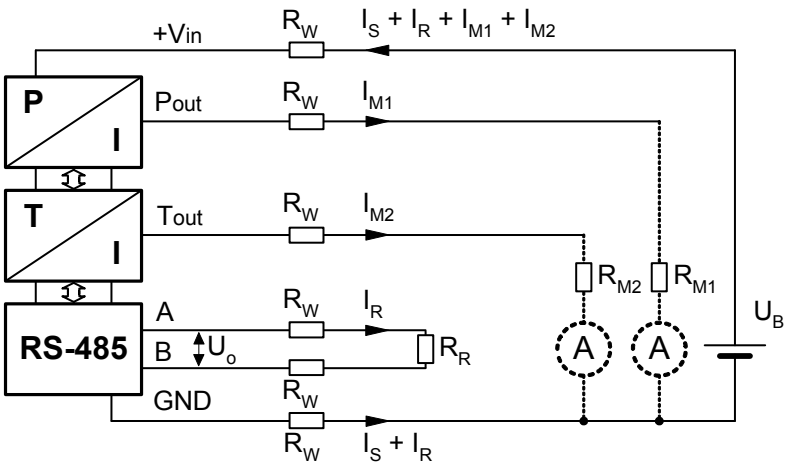

The following is valid as the result of voltage drop at the supply lines:

$$U_B \geq 2R_W\left(I_S + \frac{U_o}{2R_W + R_R}\right) + R_W\left(I_{M1\max} + I_{M2\max}\right) + V_{in\min}$$

At the same time however, the supply voltage must not be greater than the maximum supply voltage (30 V).

Maximum 4 ... 20 mA Load

In order that the output stages in the transmitter can still work properly, the load resistance (R_W + R_{Mi}) must not be greater than:

$2R_W$ = U [V] – 6V/0.02A 1 kOhm max.

RS-485 Length Limit

The total length of an RS-485 bus must not be greater than 1.2 km [0.75 mile]. This length is the addition of the lengths of all RS-485 segments that are directly connected to one another.

To cover greater distances, RS-485 / RS-485 repeaters (such as Westermo RD-48 or Phoenix PSM-ME-RS485 / RS485-P) have to be installed.

RS-485 Common Mode Limit

The current flowing through the ground (GND) conductor (supply for the probes, bus current I_R as well as possible additional current components) causes a voltage drop between the probe GND and the GND of the receiver (the same as an SPC or a processing unit or an RS-485/RS-485 repeater) which, from the view of the RS-485, presents a common mode voltage. With RS-485, this voltage must never be greater than ±7 V.

Analog Output Negative Limit

The current flowing through the ground (GND) conductor (supply for the probes, bus current I_R as well as possible additional current components) causes a voltage drop between the probe GND and the GND of the 20 mA current connection which, from the view of the probe, pulls the analog output into the negative. Even in the worst case (analog output = 4 mA), the output potential must not be less than -5 V below the probe GND.

Note

- In order to prevent destruction, the membrane must not be touched.
- For applications in the field with extension cables having a cable length ≥ 5 m [16 ft] or inside a building with cable lengths ≥ 100 m [330 ft], a transmitter with the overvoltage protection option and an external overvoltage protection ASBG.48 or an junction box MPZAD2U (at other end of the cable) must be used.
- The cable shield must be connected to a good ground potential.
- In order to compensate the long term drift an annual zero point alignment is recommended.
- If the accuracy option 0.05% FS is used, the RS-485 interface with 10'000 steps resolution (1 step = 0.01%) should be used, because the analogue output has only 4096 steps resolution (1 step = 0.024%).
- RS-485 Modbus networks with cable lengths > 100 m [330 ft] must be projected carefully (net topology, terminating resistor, type of cable, overvoltage protection).

- Conversion table for units of measurement used for pressure
  (Value in new unit) = coefficient x (value in old unit)

Coefficient	New Unit						
Old Unit	Pa = 1 N/m²	bar	mWC	ftWC	mmHg (Torr)	psi	kp/cm² = at
Pa = 1 N/m²	1	10^{-5}	1.02×10^{-4}	3.35	7.5×10^{-3}	1.45×10^{-4}	1.02×10^{-5}
bar	10^{5}	1	10.2	33.5	750	14.5	1.02
mWC	9.81×10^{3}	9.81×10^{-2}	1	3.28	73.6	1.42	0.1
ftWC	2.99×10^{3}	2.99×10^{-2}	0.305	1	22.4	0.433	3.05×10^{-2}
mmHg (Torr)	1.33×10^{2}	1.33×10^{-3}	1.36×10^{-2}	4.46×10^{-2}	1	1.93×10^{-2}	1.36×10^{-3}
psi	6.89×10^{3}	6.89×10^{-2}	0.703	2.31	51.7	1	7.03×10^{-2}
kp/cm² = at	9.81×10^{4}	0.981	10	32.8	736	14.2	1

Example: 2 bar = ? psi:
bar = "old unit", psi = "new unit", ⇒ "coefficient" = 14.5
2 bar = 14.5 x 2 psi = 29 psi

Accessories

	Abbreviation	Order No.
Programming Kit consisting of interface box and Programming Software under Windows 9x / ME / NT / 2000 / XP	MPPKIT	00 66 900.001
Cable plug-in coupling with / without cable	see configurator accessories MPG / MPJ (PZ)	
Extension cable 6-wire, shielded (L in metres)	MPZVK6	04 60 106
Junction box small IP54 (NEMA 3)	MPZAD	00 65 195.001
Junction box large IP54 (NEMA 3), 2 OVP	MPZAD2U	00 65 196.001
Overvoltage protection AC/DC 48V	ASBG.48	00 32 721.003
Ventilation fitting complete	MPZLU	00 65 540.001

Cascadia Instrumentation Inc.
Suite 383
7360 - 137 Street
Surrey BC V3W 6M2
Phone: 778-578-7956 Fax: 778-578-7986
www.cascadia-instrumentation.com